REVISIONS						
ZONE	LTR	DESCRIPTION	CHANGE No	DATE	BY	APPR'D
	A	RELEASED FOR PRODUCTION	73174	01OCT10	SLK	CFH

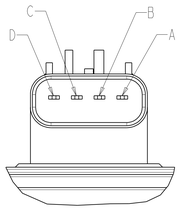

VIEW Z
SCALE 2:1

CONNECTOR WIRING	
LOCATION	FUNCTION
A	PUMP +
B	LEVEL SENDER
C	LEVEL SENDER
D	PUMP -

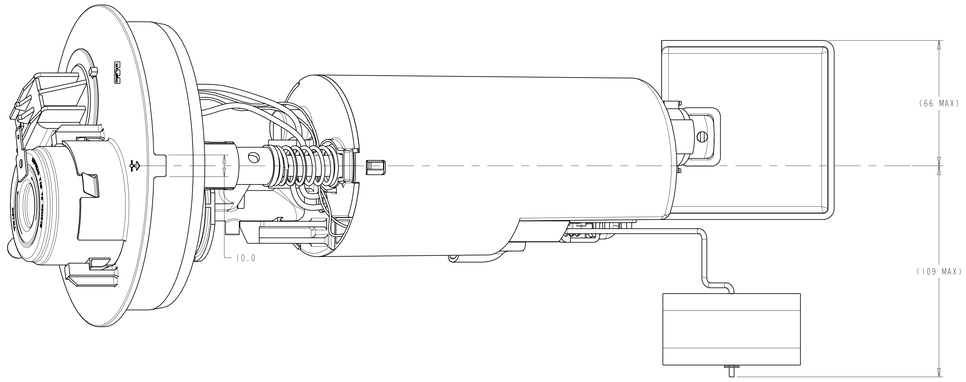

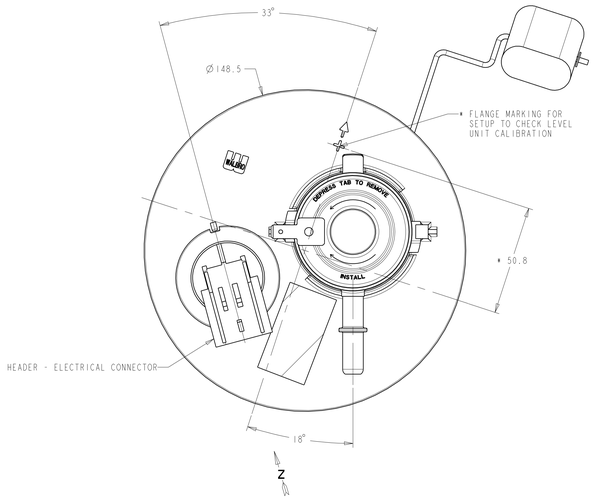

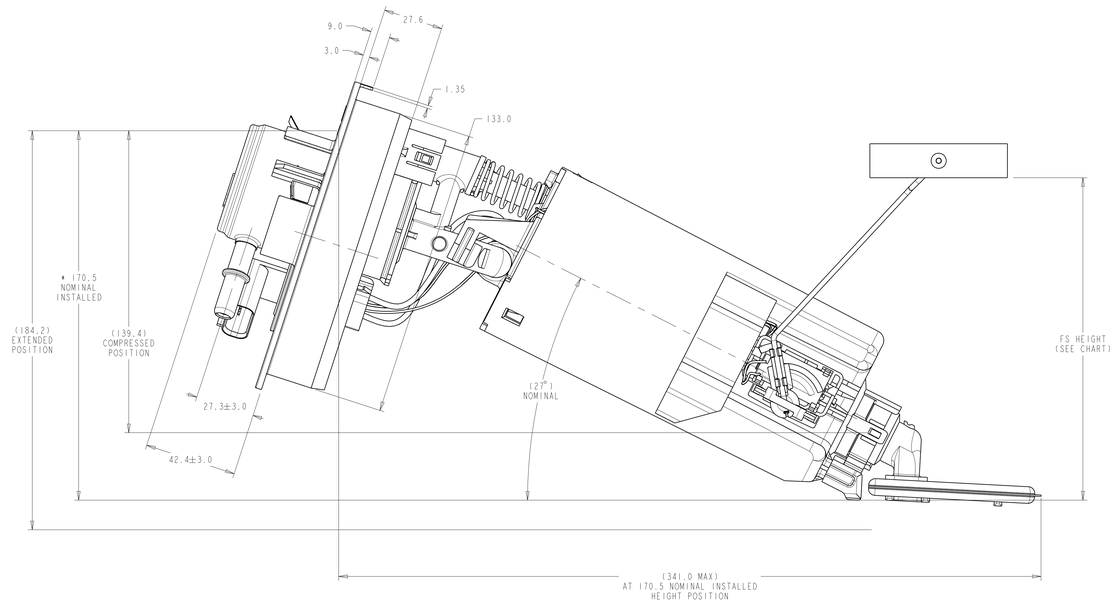

LEVEL UNIT				
RESISTANCE VS. FLOAT HEIGHT				
POINT	HEIGHT (MM) BASIC	RESISTANCES		
		NOMINAL	UPPER LIMIT	LOWER LIMIT
FS	130.7	1011.6	1026.7	996.5
ES	0.0	114.8	143.3	86.3

METRIC
ALL DIMENSIONS ARE IN MILLIMETERS

DO NOT SCALE
DECIMAL TOLERANCES UNLESS OTHERWISE SPECIFIED
ONE PLACE ±0.25 TWO PLACE ±0.13 ANGLES ±1°

THIRD ANGLE PROJECTION

DIMENSIONS IN ACCORDANCE WITH ASME Y14.5 - 2009

TI Automotive
630 COLUMBIA ST.
CARO, MI 48723
+1 989.673.7727

ENGINEER	C.HOCKMAN	01OCT10	MATERIAL/SPECIFICATION:
DES.MANAGER	S.KADY	01OCT10	
DESIGNER	S.KADY	01OCT10	
CAD SYSTEM: PRO/E	SCALE: 1:1	SHEET NO. 1 OF 1	
REFERENCE (SIZE/REV.): FM0001610		PLM REFERENCE/REV.: 000102713/AA	
REFERENCE (SIZE/REV.): CAD ASM: AR0028470/AA		PLM REFERENCE/REV.: CAD DRW: AR0028456/AA	
DRAWING NAME: FUEL MODULE ASSEMBLY - PL AFTERMARKET			
SIZE: A0	DRAWING NO./REV.: TU147		

(c) AUTOMOTIVE CONFIDENTIAL AND PROPRIETARY:
THIS DRAWING IS PROPERTY OF TI AUTOMOTIVE. TI AUTOMOTIVE CLAIMS PROPRIETARY RIGHTS IN THE SUBJECT MATTER SHOWN AND DESCRIBED ON THIS DRAWING AND RETAINS ALL INTELLECTUAL PROPERTY RIGHTS. THE DRAWING IS PROVIDED FOR REFERENCE PURPOSES ONLY AND ON THE EXPRESS CONDITION THAT IT SHALL NOT BE DISCLOSED TO THIRD PARTIES OR REPRODUCED, IN WHOLE OR IN PART, OR USED FOR THE PURPOSE OF MANUFACTURE BY OR PROCUREMENT FROM OTHERS OF THE ARTICLE OR PART SHOWN WITHOUT TI AUTOMOTIVE'S EXPRESS WRITTEN CONSENT. NO LICENSE OR OTHER RIGHTS IS GRANTED BY DELIVERY OF THIS DRAWING OR OF THIS DRAWING TO RECIPIENT.
COPYRIGHT, TI AUTOMOTIVE, 2012. ALL RIGHTS RESERVED.